Design of an Experimental Test Facility for Measurement of Pulse Tube Energy Flows

R.P. Taylor[1,2], G.F. Nellis[1], S.A. Klein[1], M. Lewis[2], P. Bradley[2], and R. Radebaugh[2]

[1]University of Wisconsin-Madison, -Madison, WI
[2]National Institute of Standards and Technology, Boulder, CO

ABSTRACT

In recent years, much effort has been directed toward the optimization of Pulse-Tube Cryocoolers (PTCs) using advanced modeling techniques such as computational fluid dynamics (CFD). These CFD models have been demonstrated to qualitatively predict the processes that one would expect in a PTC. However, for these models to become useful and accepted as design tools, precise experimental data from actual PTC systems are required for validation. More specifically, detailed measurements of the regenerator loss, acoustic power flow at the cold end, cooling power, phase angles and the instantaneous pressure and mass flows are required to thoroughly validate an advanced CFD model.

This paper discusses the design and construction of an experimental test facility that is capable of directly measuring these quantities. The purpose of the test facility is to provide validation of CFD models of the pulse tube component within a PTC as well as sophisticated regenerator models. Therefore, the test facility has been designed so that the regenerator loss is decoupled from and measured independent of the pulse-tube loss. The mass flow and pressure at the cold end are measured in order to determine the acoustic power flow entering the pulse-tube component. The acoustic power measurement, coupled with measurement of the gross cooling power and the regenerator loss, allows the loss in the pulse-tube component to be determined and provides direct validation of the CFD model that predicts the efficiency of the pulse-tube component with respect to converting acoustic power into useful cooling. Initial calibration of the test facility as well as regenerator loss measurement is presented in this paper.

INTRODUCTION

In recent years there has been a significant growth in computational power available to design engineers for solving complex thermal-fluid problems. In the cryogenics community, computational fluid dynamics (CFD) models have recently been applied to pulse-tube cryocooler (PTC) design. Previously, most PTC design models have been 1st order models that are lumped

or one-dimensional and include 2nd order effects through empirical correlations. Such models are extremely useful for understanding the basic physics present in a PTC and can be correlated or calibrated to specific designs based on measured data. However, the flow and heat transfer processes in a PTC are inherently multidimensional in nature. Recent work by Cha[1] et al., Hozumi[2],

Cryocoolers 15, edited by S.D. Miller and R.G. Ross, Jr.

and Flake and Razani[3] discuss multidimensionality CFD analysis of the entire PTC using the commercial CFD software FLUENT. These simulations showed that two dimensional flows in a PTC substantially influence system performance and cannot be neglected. In order for these CFD simulations to become useful design tools it is necessary that the various energy flows and loss mechanisms that are present in the modeled systems be delineated and reported. Additionally, in order for CFD simulations to become accepted design tools, it is necessary that they be experimentally validated. There have been few detailed experimental validation studies of CFD simulations that go beyond comparing gross quantities such as the heat rejected at the hot heat exchanger, heat accepted at the cold heat exchanger, and the input power to the compressor to those predicted by the model.

The CFD simulation developed as part of this project is focused on the pulse-tube and flow transitioning components within a PTC (rather than simulating the entire PTC); this approach more efficiently provides useful results by focusing on the areas of the PTC where the multidimensionality and complex flow occurs and results in refrigeration loss. The modeling technique and details of the simulation are discussed in Taylor[4] et al. and summarized here. The CFD model is a two-dimensional (2-D) axis-symmetric model of the pulse-tube and flow transitioning components that are implemented in the commercial CFD solver package FLUENT. Some of the features of this model include:

1. The ability to model the wire mesh screens that are typically utilized to control the flow in flow transitions through the use of a porous media model that employs empirical data to represent the inertial and viscous flow resistances in the axial and radial directions,
2. The simulation of turbulence that is present due to the high velocity flows at the warm end of the system using an appropriate turbulence model,
3. The ability to model two working fluids, ^{4}He and ^{3}He, via the use of the ideal gas equation of state or by coupling the NIST REFPROP package (which in standard form does not include ^{3}He properties)[5] to the CFD simulation, and
4. Simulation times that range from 6 to 48 hours (i.e., days) compared to other models of the entire PTC that require simulation times on the order of weeks to reach cyclic steady state.

The outputs from the model are quantitative in nature and the quantities reported to the user include: *(primary)* the pulse-tube energy flow and the acoustic power flow and *(secondary)* the effectiveness of the pulse-tube component with respect to converting acoustic power into useful cooling as well as the delineated losses associated with conduction, shuttle heat loss, and turbulence. The post-processing technique used to compute these quantities is described in Taylor[4] et al.

In order for the CFD model to be accepted and applied with confidence to a design problem, it must be experimentally verified by direct comparison to experimental data. An energy balance applied to the cold heat exchanger in a PTC at steady state (Figure 1) leads to:

$$\dot{E}_{REG,c} + \dot{Q}_{net} = \dot{E}_{PT,c} \tag{1}$$

where $\dot{E}_{REG,c}$ is the cycle average regenerator energy flow term, $\dot{Q}_{net}$ is the cycle average net cooling power, and $\dot{E}_{PT,c}$ is the cycle average energy flow through the pulse-tube and flow transitioning components. The regenerator energy flow term is also called the regenerator loss and it is the manifestation of the ineffectiveness of the regenerator; gas moving into the cold heat exchanger from the regenerator tends to be warmer than gas flowing into the regenerator from the cold heat exchanger. The pulse-tube energy flow term is the gross cooling power available for the PTC and is the manifestation of the expansion process that occurs within the pulse tube; gas flowing into the cold heat exchanger from the pulse tube tends to be colder than gas flowing into the pulse tube from the cold heat exchanger.

Also illustrated in Figure 1 (but not part of the energy balance) is the cycle average acoustic power flow at the cold end of the system. The acoustic power is calculated according to:

$$\dot{W}_{PV,c} = \left\langle P\dot{V} \right\rangle = \frac{1}{\tau}\int_0^{\tau}\int_0^{R}\left(\tilde{P}\,u\right)2\pi\, r\, dr\, dt \tag{2}$$

where $\tilde{P}$ is the dynamic pressure at the cold end and u is the velocity at the cold end. The acoustic power is not a thermodynamic energy flow but rather is the theoretical maximum rate of refrigera-

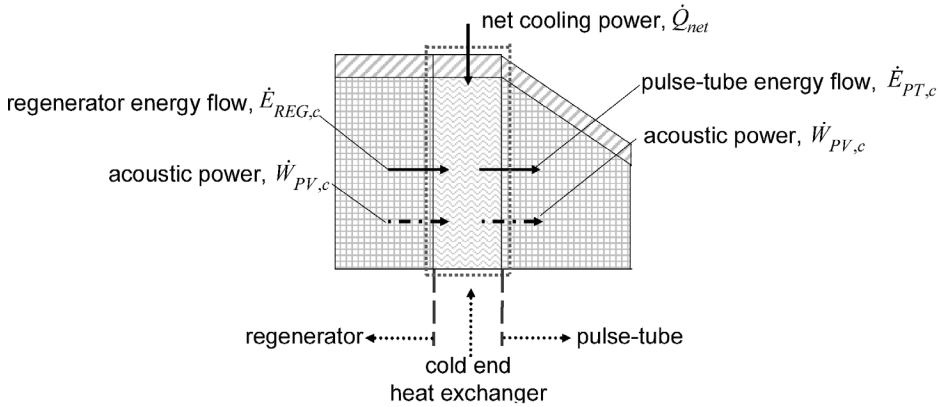

Figure 1: Illustration showing an energy balance applied to the cold heat exchanger in a PTC with delineation of the energy and power flows.

tion which would be provided if the gas entering the pulse-tube were expanded reversibly against a piston. The value of $\dot{E}_{PT,c}$ can never exceed $\dot{W}_{PV,c}$, therefore the acoustic power is used by designers to predict the performance of the pulse-tube component. The ratio of $\dot{E}_{PT,c}$ to $\dot{W}_{PV,c}$ is referred to as the pulse tube efficiency and the difference between $\dot{W}_{PV,c}$ and $\dot{E}_{PT,c}$ is referred to as the pulse tube loss. The pulse-tube loss is the most important quantity predicted by the CFD model and therefore both $\dot{W}_{PV,c}$ and $\dot{E}_{PT,c}$ must be experimentally measured in order to verify the CFD model. However, the quantity that is most directly measurable for a PTC is the net cooling power. According to Eq. (1), the net cooling power is equal to the pulse-tube energy flow less the regenerator energy flow (i.e., the "regenerator loss"). Therefore, the regenerator energy flow must be separately measured in order to infer the pulse tube energy flow from the net cooling power. The acoustic power must also be measured in order to determine the efficiency of the pulse tube.

Based on this discussion, the quantities that must be measured separately include the regenerator loss, the net cooling power, and the acoustic power flow; from these quantities, the pulse-tube energy flow and pulse tube loss can be determined for validation. None of these energy flows are directly measurable and therefore it is necessary to develop an experimental methodology that allows these terms of interest to be computed based on other measurements. The remainder of this paper outlines the experimental methodology that has been developed for this purpose, discusses the design and setup of the experimental facility, provides an analysis of the experimental uncertainty in the fundamental measurements and the propagation of this uncertainty through to the inferred quantities, and presents some initial calibration and regenerator loss measurements.

EXPERIMENTAL MEASUREMENT METHODOLOGY

The experimental methodology is summarized below and discussed in more detail in the subsequent sections.

1. Calibration of a thermal bus that allows for heat from/to the cold end to be measured.
2. Calibration of a custom mass flow meter for use under oscillatory flow conditions at cryogenic temperatures.
3. Measurements of the regenerator loss, independent of the pulse-tube component,
4. Measurements of the net cooling power with a pulse-tube.
5. Measurements of the acoustic power flow at the cold end of the system.

Bus Bar Calibration

A conductive path (referred to as the bus bar) is used to measure the rate of heat transfer between the experiment and an auxiliary source of cooling or heating, which is a commercial G-M cryocooler outfitted with a heater system, as shown in Figure 2 (left). The rate of heat transfer

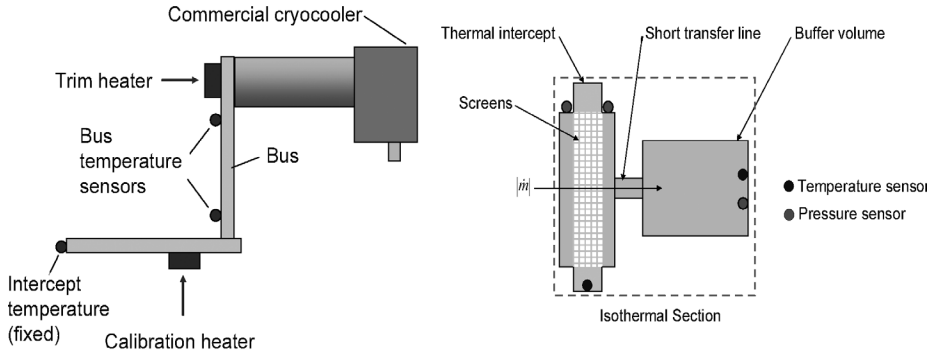

Figure 2: (left) Schematic of the test setup for calibration of the thermal bus bar; (right) Schematic of the mass flow calibration test setup.

through the bus bar is related to the temperature difference across the bus bar via an in-situ calibration process. The warm end of the bus bar is eventually interfaced with the cold end of the experimental system. The intercept temperature is set to a desired operating temperature using trim heaters on the cold stage of the commercial cryocooler. A second set of heaters (the calibration heaters) are installed at the warm end of the bar and provide a precisely measured amount of electrical heating that generates a finite temperature difference. The relationship between the temperature difference across the bus bar and the heater power conducted through it results in a calibration curve. This calibration curve has been generated over a range of heater power and at several warm end temperatures (note that by controlling the heaters placed on the commercial cryocooler it is possible to carry out these tests with the temperature of the warm end of the bus bar fixed). The bus bar calibration curve is shown in Figure 3 (left) and is used in steps 3 and 4 of the experimental procedure to determine the regenerator loss and net cooling power, respectively, at a specific temperature. It should be noted that due to the highly nonlinear thermal conductivity of the bus bar, the calibration must be repeated for all test temperatures of interest.

Mass Flow Meter Calibration

It is difficult to measure the time resolved mass flow rate in a PTC due to the oscillatory, cryogenic nature of the flow. Instruments that are typically used, such as mass flow meters or hot-wire anemometers, tend to disturb the flow field as well as introduce unwanted dead volume in the system. Rawlins[6] et al. has shown that the mass flow rate inside a PTC can be measured using specially designed hot-wire anemometers. However, discussions with the Cryogenic Technologies

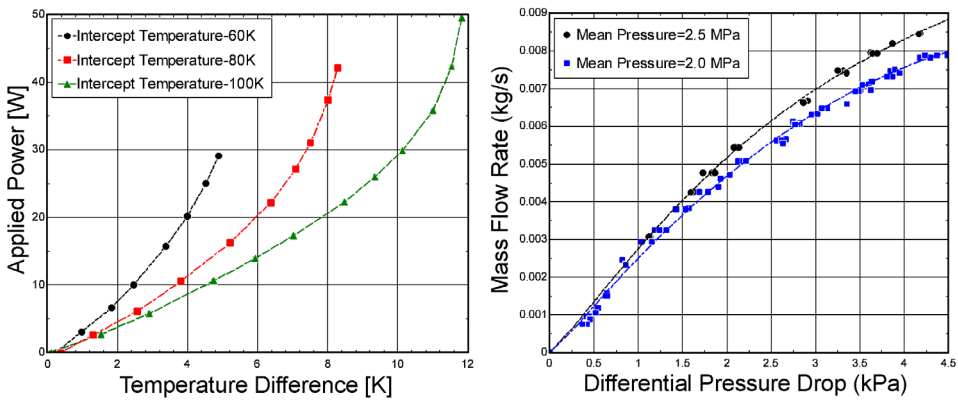

Figure 3: (left) Plot showing the experimentally measured calibration curves for the bus bar utilized for measurement of the various energy flows for temperatures of 60, 80, and 100K, (right) Plot showing the calibration data for the mass flow meter operating at 80K for mean pressures of 2.5 and 2.0 MPa.

Group at NIST (who pioneered this measurement) indicate that hot-wire based mass flow rate measurements remain very difficult to make in the pulse-tube environment due to failures in the hot wire instrumentation. Also, these instruments do not work well below about 77 K due to the reduced electrical resistance of the hot wire that leads to an extremely large power dissipation required to generate a meaningful signal and therefore adds significant bias to the measurement.

An alternative method for measuring the mass flow rate at the cold end of the system correlates the instantaneous pressure drop across a small screen pack to the instantaneous mass flow rate. The calibration of the flow measuring device is accomplished by comparing the measured pressure difference across the flow resistance (under an oscillating flow condition) to the actual mass flow rate at the entrance of a reservoir of known volume, as shown in Figure 2 (right). The flow resistance used for the experiment consists of a stack of copper mesh screens that serve the dual role of a thermal intercept (i.e., the screens are thermally connected to the bus bar that leads to the commercial cryocooler/heater system) as well as a flow measurement sensor.

The calibration of the amplitude of the pressure difference across the screens against the amplitude of the mass flow rate through the screens is carried out by installing the flow sensor on the cold end of the regenerator component and connecting it via a short transfer line to a reservoir of known volume, as shown in Figure 2 (right). The G-M cryocooler is used to cool the thermal sink, connecting line, and the reservoir volume to the same temperature. The gas temperature (reservoir temperature), pressure amplitude, and the volume of the reservoir are used to determine the magnitude of the mass flow rate $|\dot{m}_{res}|$ at the reservoir inlet according to Eq. (3) (which assumes adiabatic behavior of the ideal gas in the reservoir).

$$\left|\dot{m}_{res}\right| = \frac{|P| V_{res}}{\gamma T_{res} R} \tag{3}$$

where V_{res} is the volume of the reservoir, T_{res} is the temperature of the reservoir gas measured via the reservoir wall temperature, and g is the ratio of specific heats for the working fluid. The dead volume and flow resistance between the flow sensor and the reservoir volume is made as small as possible and therefore the mass flow rate entering the reservoir is very nearly equal to the mass flow passing through the flow sensor; the small difference is corrected for using an analytical model. The assumption of adiabatic conditions within the reservoir is justified by the fact that the size of the reservoir volume is orders of magnitude larger than the thermal penetration depth into the gas. This implies that while there is some small heat transfer with the reservoir wall, the bulk of the gas in the reservoir experiences nearly an adiabatic process. The calibration of the mass flow meter at two mean pressures and an operating temperature of 80 K is shown in Figure 3 (right).

Regenerator Loss Measurement

The total energy flow towards the cold end of an isolated regenerator, also called the regenerator loss, is a combination of a net enthalpy flow related to the fact that the gas traveling towards the cold end is warmer than the gas that is returning as well as axial conduction through the various materials that make up the regenerator. The net result is an undesired heat load at the cold end (i.e., a loss of available cooling power). The regenerator is isolated from the pulse-tube component and interfaced to the commercial cryocooler using the calibrated bus bar, as shown in Figure 4 (left). The regenerator loss is determined using the calibration curve shown in Figure 3 (left). As it is necessary to measure the performance of the pulse-tube component at different cold end temperatures for validation purposes, the regenerator loss measurement must also be repeated at various cold end temperatures and under various flow conditions (e.g., pressure and flow amplitude) that can be reproduced during subsequent testing of the pulse tube.

Net Cooling Power Measurement

In order to measurement the net cooling power for the PTC, the pulse-tube and inertance tube are installed in order to create a complete PTC. The cold end of the PTC is thermally interfaced to the G-M cryocooler via the previously calibrated thermal bus bar, as shown in Figure 3 (right). The addition of the pulse-tube component allows the experimental setup to produce a finite rate of cooling at the cold end, although this is not necessary to obtain meaningful measurements. The heaters provided on the G-M cryocooler allow the unit to serve as a source of either heating or

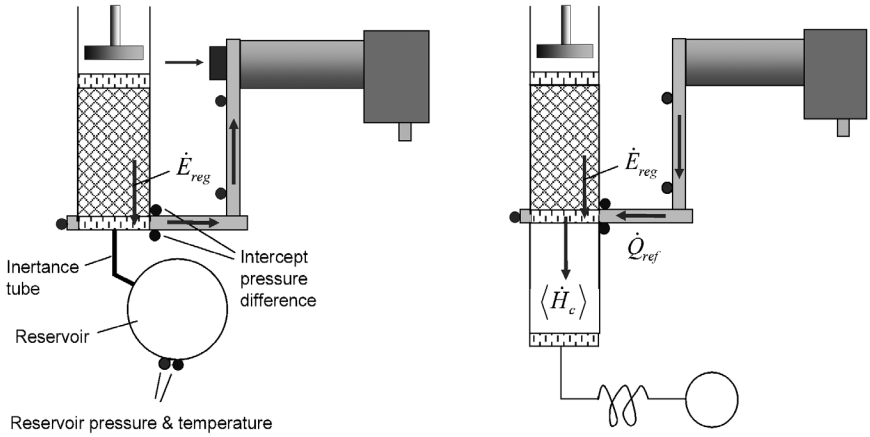

Figure 4: (left) Illustration showing the test setup for measurement of the regenerator loss, (right) Illustration showing the test setup for measurement of the net cooling power and subsequent pulse-tube energy flow.

cooling. Regardless of direction the temperature difference across the bus bar can be correlated to the net cooling power via the bus bar calibration curve.

Pulse-Tube Loss Characterization

The measurement of the net cooling power together with the previously measured regenerator loss, at an identical operating condition, can be used to determine the pulse-tube energy flow via Eq. (1). This measurement is one of the primary quantities required for validation of the developed CFD model. The difference between the pulse tube energy flow and the acoustic power is the pulse tube loss and the ratio of the pulse tube energy flow to the acoustic power is the pulse tube efficiency. Either of these quantities are the most relevant parameters for characterizing a pulse tube and both require that the acoustic power be measured. Measurement of the acoustic power requires knowledge of the actual, time-resolved flow conditions at the cold end of the pulse tube in order to carry out the integration shown in Eq. (2). The differential pressure is measured across the flow sensor (i.e., the thermal intercept) during operation and used with the calibration curve shown in Figure 3 (right) to determine the instantaneous mass flow rate. The absolute pressure is separately measured using a fast response pressure sensor.

EXPERIMENTAL UNCERTAINTY AND RESULTS

Experimental Uncertainty

As of publication, only the measurement of the regenerator energy flow has been accomplished. As a result, the uncertainty analysis is focused on this measurement. However, it should be noted that the analysis presented herein has been applied to the other experimental quantities and the test facility instrumentation has been designed based on this analysis. The initial starting point for the regenerator energy flow measurement (or the net cooling power measurement) is the calibration of the conductive thermal pathway that links the cold end of the test facility to the cryocooler. However, due to the non-linearity in the experimental data for the bus bar calibration, one must convert the raw experimental data, with some associated uncertainty, into a useful form via a regression analysis in order to generate the calibration curve. A typical regression analysis assumes that the independent data (e.g., the temperature difference) is error free while the dependent data (e.g., the applied heater power) has some finite experimental error. However, in this case, both of the variables have uncertainty at each data point; this must be accounted for in the regression analysis as described by Taylor.[7] To facilitate this, a commercial fitting software program[8] is utilized to fit the experimental data. The regression analysis is a bivariate regression and therefore includes the

uncertainty in both axes via a weighting function that propagates the uncertainty from the independent variable into the prediction for the dependent variable (heater power). Using this program, the bus bar data can be fitted using any desired function; for this analysis, a 3rd order polynomial was utilized. The results from this analysis yield an expression for the heat flow ($\dot{E}$) as a function of the measured temperature difference given by,

$$\dot{E} = A\Delta T + B\Delta T^2 + C\Delta T^3 \tag{5}$$

where, A, B, and C are the fitted coefficients, each having a finite uncertainty. Once the calibration curve has been generated, the total uncertainty in the measurement of the regenerator energy flow can be determined via an uncertainty propagation analysis carried out on Eq. (5) including the uncertainty in the coefficients as well as the uncertainty in the temperature difference measurement. The uncertainty propagation is performed via partial differentiation of Eq. (5) with respect to each of the variables and leads to:

$$U_{\dot{E}} = \left(\left(\frac{\partial \dot{E}}{\partial A} U_A \right)^2 + \left(\frac{\partial \dot{E}}{\partial B} U_B \right)^2 + \left(\frac{\partial \dot{E}}{\partial C} U_C \right)^2 + \left(\frac{\partial \dot{E}}{\partial \Delta T} U_{\Delta T} \right)^2 \right)^{\frac{1}{2}} \tag{6}$$

where U_A,U_B, U_c, and $U_{\Delta T}$ are the specific uncertainty values for each of the coefficients of the calibration curve and U_{DT} is the uncertainty in the measurement of the temperature difference. The partial differentials are relatively straightforward and therefore are not listed. A similar uncertainty analysis is performed for all of the experimental measurements as they all depend on the fitting of data to a calibration. The error bars presented for the data are designated using this uncertainty analysis.

REGENERATOR ENERGY FLOW

The regenerator that has been tested is typical of what is used in a medium capacity PTC; the geometric specifications for the regenerator are listed in Table 1. An inertance tube was designed to provide the correct phase shift and flow rate using the model developed by Schunk.[9] A photograph of the experimental test setup utilized for the regenerator loss measurements is illustrated in Figure 5. For all test runs in which the regenerator energy flow was measured, the cold end temperature was maintained at 80K and an average pressure of 2.5 MPa was maintained. The parameter which was varied during the regenerator test was the cold end pressure ratio. The experimental results for the regenerator energy flow measurement as function of the cold end pressure ratio are presented in Figure 6.

As the results in Figure 6 show, the experimentally measured regenerator loss agrees rather well with the predictions from the inertance tube model coupled with simulations using Regen3.3.[10] The comparison to the model data was performed via determination of the mass flow rate and phase angle at the cold end using the inertance tube model taking into account the added resistance due to entrance and exit effects (calculated analytically) at each end of the inertance tube. The mass flow predicted by the inertance tube model was then compared to the actual mass flow at the cold end determined via computation of mass flow in the reservoir using Eq. (3). The results of this analysis indicated agreement to within one percent between the experimental mass flow and the mass flow predicted by the inertance tube model. The mass flow rate and phase angle were used as inputs into the REGEN3.3; the primary inputs into the REGEN3.3 program are summarized in Table 2. The regenerator loss predicted by REGEN3.3 and those measured are shown in Figure 6.

Table 1: Regenerator Specifications

Regenerator Parameter	Nominal Value
Length (mm)	42
Diameter (mm)	39.37
Wall thickness (mm)	0.635
Porosity (-)	0.75
Packing Material	#400 Stainless Steel

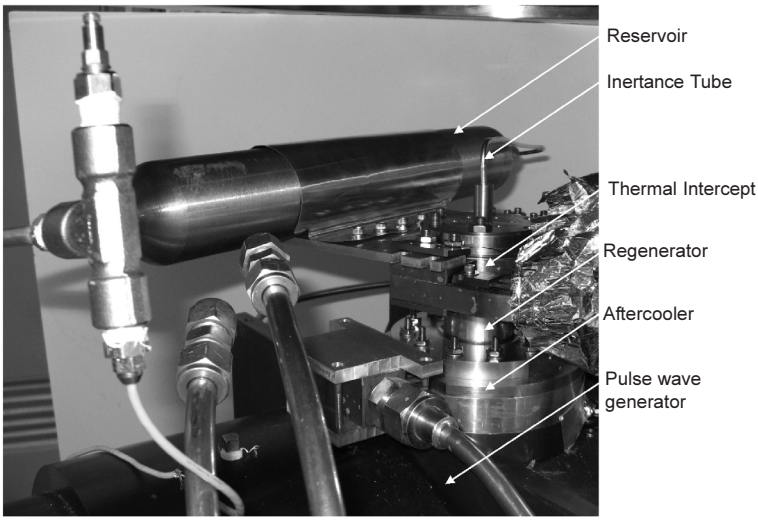

Figure 5: Photo illustrating the constructed test facility for measurement of the regenerator energy flow.

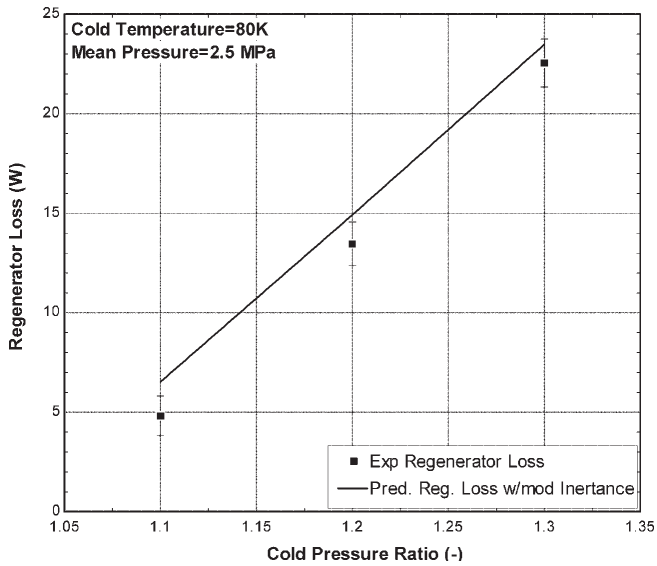

Figure 6: Plot showing the experimental results for the measurement of the regenerator loss as a function of the cold end pressure ratio with error bars; overlaid are the modeling predictions using the distributed component inertance tube model including entrance and exit effects coupled with REGEN3.3 predictions for the regenerator loss.

Table 2 – Regenerator Test Conditions

Regenerator Parameter	PR=1.1	PR=1.2	PR=1.3
Cold mass flow rate (g/s)	5.5	8	10.5
Cold phase angle (deg)	-31	-22	-30
Cold temperature (K)	80.01	80.05	79.95
Warm temperature (K)	298	299	301
Average pressure (MPa)	2.495	2.502	2.505

CONCLUSION

This paper has discussed the design of an experimental methodology as well as the fabrication and calibration of an experiment that measures the regenerator energy flow, the acoustic power flow, and the net cooling power in a PTC. Utilizing these measurements, the pulse-tube energy flow, pulse-tube loss, and the efficiency of the pulse-tube component can be computed. These measurements provide validation to sophisticated regenerator and pulse tube component models, allowing their application as design tools in the cryocooler industry. Initial results for the measurement of the regenerator energy flow are presented for operation at a cold end temperature of 80K and a mean pressure of 2.5 MPa. The results of these measurements indicate that the test facility is capable of accurately measuring the mass flow rate and phase as well as the regenerator energy flow. This is a critical component in the determination of the pulse-tube energy flow, the pulse-tube loss, and the pulse-tube efficiency. The results also verify the regenerator modeling tool REGEN3.3.

The preliminary measurements showed that the mass flow meter could be improved by designing it to provide somewhat larger pressure drops that could be measured more accurately. Increasing the magnitude of the pressure drop across the mass flow meter will significantly improve the resolution of the measurement of the mass flow and phase angle which is particularly important for direct measurement of the acoustic power. As a result, current work is directed at a redesign of the mass flow meter. Additionally, ongoing experimental work is focused on measuring the net cooling power and acoustic power flow for various CFD guided pulse-tube and flow transition designs.

ACKNOWLEDGMENT

The authors would like to acknowledge the support for this work by the Office of Naval Research under contract N00014-06-1-0007, the CEC Timmerhaus scholarship, the Wisconsin Space Grant Consortium, and the Mechanical Engineering Department at the University of Wisconsin-Madison. Additionally, the authors wish to thank Mike Rybowiak for careful machining of all parts utilized to carry out this work.

REFERENCES

1. Cha, J.S., Ghiaasiaan, S.M., Desai, P.V., Harvey, J.P., and Kirkconnell, C.S., "CFD Simulation of Multi-Dimensional Effects in an Inertance Tube Pulse Tube Refrigerator," *Cryocoolers 13*, Kluwer Academic/Plenum Publishers, New York (2005), pp. 285-292.
2. Hozumi, Y., Murakami, M., and Iida, T., "Numerical Study of Pulse Tube Flow," *Cryocoolers 10*, Plenum Publishing Corp., New York (1999), pp. 321-328.
3. Flake B. and Razani, A., "Modeling Pulse Tube Cryocoolers with CFD," *Adv. in Cryogenic Engineering*, Vol. 49B, Amer. Institute of Physics, Melville, NY (2004), pp. 1493-1499.
4. Taylor, R.P., Nellis, G.F., and Klein, S.A., "Optimal Pulse-tube Design using Computational Fluid Dynamics,"*Adv. in Cryogenic Engineering*, Vol. 53, Amer. Institute of Physics, Melville, NY (2008), pp 1401-1410.
5. Lemmon, E., "HE3 Properties for REFPROP," Personal communication, (2008).
6. Rawlins, W., Radebaugh, R., Timmerhaus, K.D., "Thermal anemometry for mass flow measurements in oscillating cryogenic gas flows," *Rev. Sci. Instrum.,* Vol. 64, No. 11, (1993), pp 3229-3235.
7. Taylor, R.P., "Development and Experimental Validation of a Pulse-Tube Design Tool Using Computational Fluid Dynamics," *Ph.D Thesis,* The University of Wisconsin-Madison., in preparation for publication, (2008-2009).
8. Silva, W.P. and Cleide M.D., "LAB Fit Curve Fitting Software (Nonlinear Regression and Treatment of Data Program) V 7.2.37", Available online at www.labfit.net, (2007).
9. Schunk, L.O., "Experimental Investigation and Modeling of Inertance Tubes," *Ph.D Thesis,* The University of Wisconsin-Madison., (2004), pp 23-29.
10. Gary, J., O'Gallagher, A., Radebaugh, R., Huang, Y., and Marquardt, E., "REGEN3.3: User Manual," *National Institute of Standards and Technology,* Boulder, CO (2008).